PARTS FOR:
RETRACTABLE AIR HOSE REEL 12mtr Ø8mm ID TPU HOSE
MODEL: **SA90.V2**

Issue: 1
Issue Date: 140709

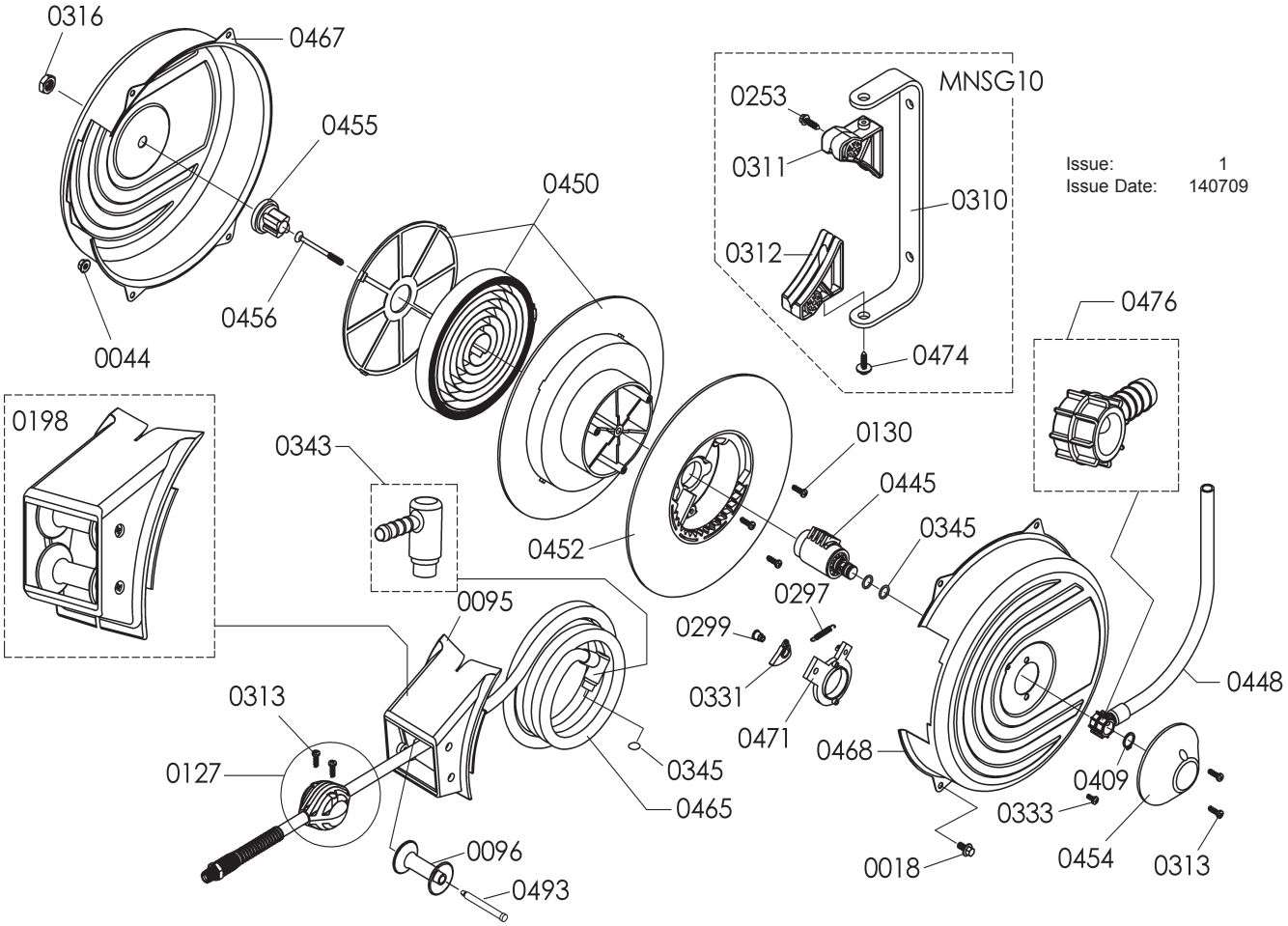

ITEM	PART NO	DESCRIPTION	ITEM	PART NO	DESCRIPTION
0018	SA90.V2-0018	SCREW (M6x10)	0345	SA90.V2-0345	O-RING (11.1x1.78)
0044	SA90.V2-0044	NUT M6	0409	SA90.V2-0409	SEEGER RING
0095	SA90.V2-0095	ROLLER SUPPORT PLATE	0445	SA90.V2-0445	SWIVEL SHAFT
0096	SA90.V2-0096	GUIDE HOSE ROLLER	0448	SA90.V2-0448	INLET HOSE 1mtr
0127	SA90.V2-0127	HOSE STOPPER d.12	0450	SA90.V2-0450	MAIN SPRING ASS'Y
0130	SA90.V2-0130	SCREW (5x12)	0452	SA90.V2-0452	HALF DRUM
0198	SA90.V2-0198	ROLLER SUPPORT (COMPLETE)	0454	SA90.V2-0454	PLASTIC COVER
0253	SA90.V2-0253	SCREW (6x21)	0455	SA90.V2-0455	SPRING LINKAGE SHAFT
0297	SA90.V2-0297	SPRING FOR HOOK	0456	SA90.V2-0456	SCREW (6x66)
0299	SA90.V2-0299	PIN FOR HOOK	0465	SA90.V2-0465	HOSE 12mtr
0310	SA90.V2-0310	BRACKET	0467	SA90.V2-0467	HALF-CASING (SPRING SIDE)
0311	SA90.V2-0311	UPPER HALF-SUPPORT (NYLON)	0468	SA90.V2-0468	HALF-CASING (SWIVEL JOINT SIDE)
0312	SA90.V2-0312	LOWER HALF-SUPPORT (NYLON)	0471	SA90.V2-0471	SUPPORT FOR RATCHET HOOK
0313	SA90.V2-0313	SCREW (5x16)	0474	SA90.V2-0474	SCREW (6x20)
0316	SA90.V2-0316	NUT M12	0476	SA90.V2-0476	PLASTIC FITTING FOR SWIVEL JOINT
0331	SA90.V2-0331	RATCHET HOOK	0493	SA90.V2-0493	NYLON PIN (8x77)
0333	SA90.V2-0333	SCREW (M4x10)	MNSG10	SA90.V2-WB	WALL BRACKET ASS'Y
0343	SA90.V2-0343	HOSE CONNECTOR 90degree			

NOTE: *It is our policy to continually improve products and as such we reserve the right to alter data, specifications and component parts without prior notice.*
IMPORTANT: No liability is accepted for incorrect use of product.
WARRANTY: Guarantee is 12 months from purchase date, proof of which will be required for any claim.
INFORMATION: For a copy of our latest catalogue and promotions call us on 01284 757525 and leave your full name and address, including postcode.

Sole UK Distributor
Sealey Group,
Bury St. Edmunds, Suffolk.
01284 757500
01284 703534
www.sealey.co.uk
sales@sealey.co.uk